Electronic Metering Pumps

Series D

Installation
Operation
Maintenance
Instruction

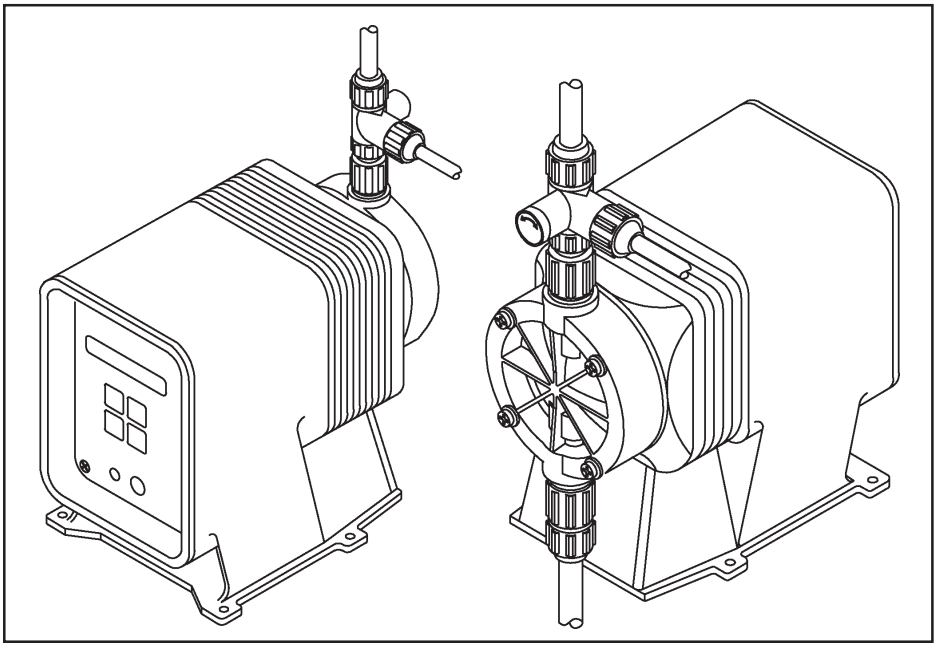

READ ALL WARNINGS CAREFULLY BEFORE INSTALLING

CE

TABLE OF CONTENTS

Page

1.0 SAFETY INSTRUCTIONS 3
1.1 General Safety Considerations 3
1.2 Safety Operating Procedures 3

2.0 UNPACKING THE PUMP 6

3.0 INTRODUCTION 6
3.1 Principle of Operation 6
3.2 Materials of Construction 6

4.0. INSTALLATION 7
4.1 Mounting 7
4.2 Piping 9
4.3 Wiring 10
4.4 Well Pump System Installation 10

5.0 START UP AND OPERATION 11
5.1 Control Panel 11
5.2 Power 11
5.2.1 Power-Up 12
5.3 Priming 12
5.4 Capacity Control 13
5.4.1 Fixed Operation 13
5.4.2 Pace Operation 14
5.4.2.1 Pace Wiring 14
5.4.2.2 Pace Configuration 15
5.4.2.3 Pace Operation 17
5.4.2.4 Flow Measurement 18
5.4.3 Stop Operation 18

6.0. MAINTENANCE 19
6.1 Routine Maintenance 19
6.2 Disassembly and Assembly Diaphragm Removal 20
6.3 Diaphragm Replacement 20
6.4 Valve Replacement 21

7.0 TROUBLESHOOTING 22

8.0. POLICIES AND PROCEDURES 25
8.1 Manufacturer's Product Warranty 25
8.2 European Technical File Location 25
8.3 Returns 26
8.4 Credits 26

9.0 SPECIFICATIONS 27

1.0 SAFETY INSTRUCTIONS

WARNING

When using chemical feed pumps, basic safety precautions should always be followed to reduce risk of fire, electric shock, and personal injury. Failure to follow these instructions could result in death or serious injury.

READ ALL INSTRUCTIONS

1.1 GENERAL SAFETY CONSIDERATIONS

- Always wear protective clothing including gloves and safety goggles when working on or near chemical metering pumps.
- Inspect tubing regularly when replenishing chemical solution for cracking or deterioration and replace as necessary. **(Always wear protective clothing and safety glasses when inspecting tubing.)**
- When pump is exposed to direct sunlight use U.V. resistant tubing.
- Follow directions and warnings provided with the chemicals from the chemical manufacturer. User is responsible for determining chemical compatibility with chemical feed pump.
- Secure chemicals and metering pumps, making them inaccessible to children and pets.
- Make sure the voltage on the chemical metering pump matches the voltage at the installation site.
- Do not cut the ground lug off of the electrical cord – consult a licensed electrician for proper installation.
- Pump is **NOT** to be used to handle flammable liquids.

1.2 SAFETY OPERATING PROCEDURES

Each Electronic Metering Pump has been tested to meet prescribed specifications and safety standards.

Proper care in handling, installation and operation will help in ensuring a trouble free installation.

Please read all these cautionary notes prior to installation and start-up of your metering pump.

Important: Pump must be installed and used with supplied back pressure/ injection valve. Failure to do so could result in excessive pump output.

- Handle the pump with care. Dropping or heavy impact causes not only external damage to the pump, but also to electrical parts inside.

- Install the pump in a place where the ambient temperature does not exceed 104°F (40°C). The pump is water resistant and dust proof by construction and can be use outdoors, however **do not operate the pump submerged.** To avoid high internal pump temperatures, do not operate in direct sunlight.

  CAUTION Solenoid housing, head and pump housing may be hot to touch 160°F (70°C).

- Install the pump in a place convenient for its future maintenance and inspection, and then secure it to prevent vibration.

- Protective caps must be removed prior to installing tubing onto valve assemblies. Use tubing of specified size. Connect the tubing to the suction side securely to prevent the entrance of outside air. Make sure that there is no liquid leakage on the discharge side.

- Be careful to check that the voltage of the installation matches voltage indicated on the pump data label. Most pump models are equipped with a three-prong plug. Always be sure the pump is grounded. To disconnect, do not pull wire but grip the plug with fingers and pull out. Do not use the receptacle in common with heavy electrical equipment, which generates surge voltage. It can cause failure of the electronic circuit inside the pump.

- Tampering with electrical devices can be potentially hazardous. Always place chemicals and pump installation well out of the reach of children.

- Never repair or move the metering pump while operating. Always disconnect electrical power. **For safety, always wear protective clothing, protective gloves and safety glasses when working on or near chemical metering pumps.**

- An air bleed valve is available for most models with tubing connections. Air purges should be performed when the pump-chamber contains no fluid at the time of start-up. As a safety measure, connect the return tubing to the air bleed valve and bypass fluid back to storage tank or a suitable drain.

- For accurate volume output, the pump must be calibrated under typical operating conditions.

- Chemicals used may be dangerous and should be used carefully and according to warnings on the label. Follow the directions given with each type of chemical. Do not assume chemicals are the same because they look alike. Always store chemicals in a safe location away from children and others. We cannot be responsible for the misuse of chemicals being fed by the pump. Always have the material safety data sheet (MSDS) available for any fluid being pumped.

- All pumps are pretested with water before shipment. Remove head and dry thoroughly if you are pumping a material that will react with water, (i.e. sulfuric acid, polymers). Valve seats, ball checks, gaskets, and diaphragm should also be dried. Before placing pump into service, extreme care should be taken to follow this procedure.

- Valve cartridges are stamped to indicate fluid flow direction. Always install so that markings read from top to bottom, with the arrow pointing in the direction of flow.

- When metering hazardous material **DO NOT** use plastic tubing, strictly use proper rigid pipe. Consult supplier for special adapters or valve assemblies.

- **Pump is NOT to be used to handle or meter flammable liquids or materials.**

- Standard white discharge tubing is not recommended for installations exposed to direct sunlight. Consult supplier for special black tubing.

- Factory will not be held responsible for improper installation of pump, or plumbing. All cautions are to be read thoroughly prior to hookup and plumbing. For all installations a professional plumber should be consulted. Always adhere to local plumbing codes and requirements.

- When using pump with pressurized systems, make sure the pressure of the system does not exceed the maximum pressure rating on the pump data label. Be sure to depressurize system prior to hook up or disconnecting a metering pump.

- Electronic power modules are equipped with automatic reset thermal overload devices and may reset unexpectedly.

2.0 UNPACKING THE PUMP

Check all equipment for completeness against the order and for any evidence of shipping damage. Shortages or damages should be reported immediately to the carrier and to the seller of the equipment.

The carton should Contain:

- -Metering Pump
- -Clear Flexible Suction Tubing*
- -Stiff White Discharge Tubing*
- -Foot valve/Strainer Assembly
- -Backpressure Injection Valve Assembly
- -10 ft. prewired pace/stop cable
- -Manual
- -Bleed Valve Assembly*
- -Strainer Weight*

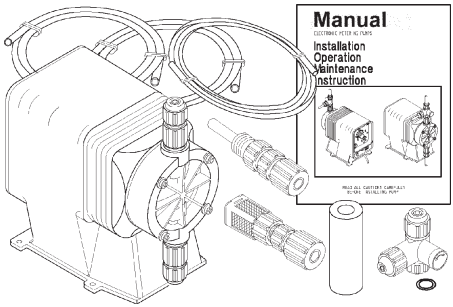

FIGURE 1

*Items may or may not be included depending on model.

Make sure that all items have been removed from the shipping carton before it is discarded.

3.0 INTRODUCTION

These installation, operation and maintenance instructions cover your electronic metering pump. Refer to the pump data label to determine the actual model.

3.1 PRINCIPLE OF OPERATION

Diaphragm metering pumps are used to dispense chemicals or fluids. This is achieved by an electromagnetic drive mechanism (solenoid), which is connected to a diaphragm. When the solenoid is pulsed by the control circuit it displaces the diaphragm, which, through the use of check valves, moves the fluid out the discharge under pressure. When the solenoid is de-energized it returns the diaphragm and pulls more fluid into the pump head and the cycle repeats.

3.2 MATERIALS OF CONSTRUCTION

The wetted materials (those parts that contact the solution being pumped) available for construction are: FPP (glass filled polypropylene), PVC, SAN, Hypalon, Viton, Teflon, 316 Stainless Steel, PVDF, Ceramic and Alloy C. These materials are very resistant to most chemicals. However, there are some chemicals, such as strong acids or organic solvents, which cause deterioration of some elastomer and plastic parts, such as the diaphragm, valve seats, or head.

3.2 MATERIALS OF CONSTRUCTION cont'd.

Consult a Chemical Resistance Guide or Supplier for information on chemical compatibility.

Various manufacturers of plastics, elastomers and pumping equipment publish guidelines that aid in the selection of wetted materials for pumping commercially available chemicals and chemical compounds. Two factors must always be considered when using an elastomer or plastic part to pump chemicals. They are:

- The temperature of service: Higher temperatures increase the effect of chemicals on wetted materials. The increase varies with the material and the chemical being used. A material quite stable at room temperature might be affected at higher temperatures.

- Material choice: Materials with similar properties may differ greatly from one another in performance when exposed to certain chemicals.

4.0 INSTALLATION

The metering pump should be located in an area that allows convenient connections to both the chemical storage tank and the point of injection. The pump is water resistant and dust proof by construction and can be used outdoors, however, **do not operate submerged.** Avoid continuous temperatures in excess of 104°F (40°C). To do otherwise could result in damage to the pump.

NOTE: The unit should be positioned such that the plug is accessible.

4.1 MOUNTING

Typical mounting arrangements are shown in Figures 3, 4, and 5.

Important: Injection point must be higher than the top of the solution supply tank to prohibit gravity feeding, unless suitable backpressure is always present at the injection point. Installation of an antisiphon valve will prohibit gravity feeding.

- For wall or shelf mounting refer to Figure 3. Connect suction tubing to suction valve of chemical pump. Suction valve is the lower valve. Tubing should be long enough so that the foot valve/strainer assembly hangs about 1-2 inches (2-5 cm) above the bottom of chemical tank. To keep chemical from being contaminated, the tank should have a cover.

- Flooded suction mounting (installing the pump at the base of the chemical storage tank, Figure 4) is the most trouble free type of installation and is recommended for very low output requirements. Since the suction tubing is filled with chemical, priming is accomplished quickly and the chance of losing prime is reduced.

To mount pump, drill four holes of .25" (6 mm) diameter in the shelf as shown in the dimension drawing (Figure 2). Attach pump securely using four #10 (M5) bolts and nuts.

- The pump can be mounted on top of a solution tank as shown in Figure 5. Install chemical pump on the cover. Insert suction tubing through the center hole and cut tubing so foot valve/strainer hangs about 1 or 2 inches (2-5 cm) above the bottom of the tank. Mount the chemical pump rigidly by drilling four .25" (6 mm) holes and using four #10 (M5) screws and nuts.

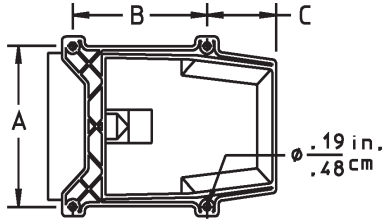

MOUNTING HOLE DIMENSIONS

HOUSING SIZE	DIMENSIONS (in./cm.) A	B	C
HSG.#1	4.50/11.4	3.00/ 7.6	1.75/4.4

FIGURE 2

- USE AN ANTI-SIPHON VALVE IN THE DISCHARGE LINE whenever the fluid pressure in the discharge line is below atmospheric pressure. This can occur if the injection point is on the suction side of a water pump or against a "negative" head such as when feeding down into a well.

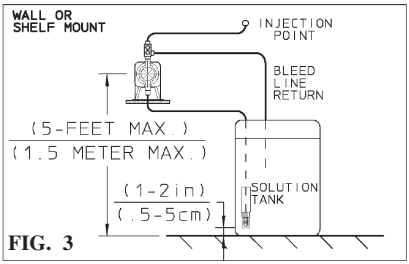

FIG. 3

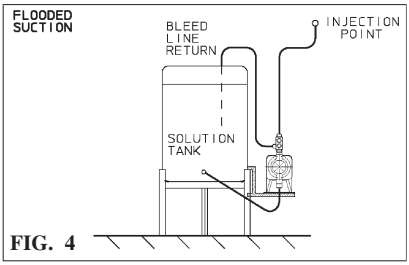

FIG. 4

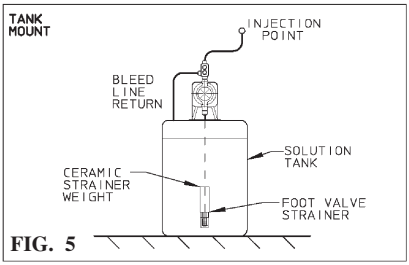

FIG. 5

4.2 PIPING

- Use provided tubing of specified size for connection. Connect tubing securely to prevent leakage of chemical and the entrance of air. Since plastic nuts are used for fittings, they should not be tightened excessively (i.e. hand tighten only). NPT suction and discharge valves must **NOT** be over tightened. Hold fitting in place while adding piping and fittings. NPT suction and discharge valves should only be tightened 25 to 35 in. lbs. (4.5-6.3 kg/cm).
- If the air bleed valve assembly is being used, a return line (tubing) should be securely connected and routed back to the storage tank. **To avoid possible injury from chemicals do not attempt to prime using a bleed valve without installing a return line.**
- When pump is shelf mounted or top mounted on tank, suction tubing should be kept as short as possible.
- To maintain metering performance, a backpressure/injection valve is provided. The spring in the standard injection valve typically adds 17 - 20 PSI (1.17 - 1.38 BAR) to the line pressure. The injection valve must be installed in the discharge line. Best practice is to install the injection valve at the point of chemical injection.
- If the discharge tubing is going to be exposed to direct sunlight, black tubing should be used instead of the standard white translucent tubing supplied with each pump. To obtain, contact supplier.
- To prevent clogging or check valve malfunction always install a strainer assembly to the end of the suction tubing (Figure 5). This foot valve/strainer assembly should always be installed 1 to 2 inches (2-5 cm) above the bottom of the chemical tank. This will help prevent clogging the strainer with any solids that may settle on the tank bottom. The chemical tank and foot valve/strainer should be cleaned regularly, to ensure continuous trouble free operation. If the chemical being pumped regularly precipitates out of solution or does not dissolve easily or completely (e.g. calcium hydroxide), a mixer should be used in the chemical tank. These are readily available in many motor configurations and mounting. To obtain, contact supplier.
- A flooded suction (tank liquid level always at a higher elevation than the pump) is recommended when pumping solutions such as sodium hypochlorite (NaOCl), hydrogen peroxide (H_2O_2), etc., which are likely to produce air bubbles. Maintaining a low liquid temperature will also help eliminate this problem.
- Pipe corrosion can result if dilution at the injection point does not occur rapidly. This problem is easily prevented by observing this simple rule: install injection fitting so that the end is in the center of the flow stream of the line being treated. Trim injector tip as required. See Figure 6. Note: Extended injection assemblies are available for large water lines. Consult your supplier for more information.

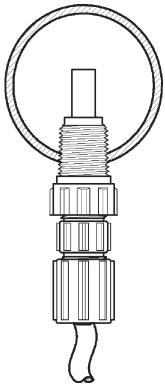

FIGURE 6

4.3 WIRING

- **WARNING —Risk of electrical shock. This pump is supplied with a three-prong grounding type power plug. To reduce risk of electric shock, connect only to a properly grounded, grounding type receptacle.**

- The metering pump should be wired to an electrical source, which conforms to those on the pump data label. Applying higher voltage than the pump is rated for will damage the internal circuit.

- In the electronic circuit of the control unit, measures for surge voltage are made by means of surge absorbing elements and high voltage semiconductors. Nevertheless, excessive surge voltage may cause failure in some areas. Therefore, the power connection of the pump should not be used in common with heavy electrical equipment, which generates high voltage. If this is unavoidable however, measures should be taken by (a) the installation of a surge-absorbing element (varistor of min. surge resistance 2000A) to the power supply connection of the pump, or (b) the installation of a noise suppression transformer.

- Signal input to the external pulse signal input terminals ([EXTERNAL], [STOP]) must be a no-voltage signal from relay-contacts etc. and the input of other signals is prohibited. (In the case of relay contacts, 100 ohms or below when ON and 1-meg ohms or above when OFF). The pulse duration of the input signal must be 10 milliseconds or over and the frequency of the input signal must not exceed 125 times per minute in dry contact mode of operation.

4.4 WELL PUMP SYSTEM INSTALLATION

Ensure that the metering pump voltage matches the voltage of the well pump. Typical well pump electrical circuits are shown in Figure 8. All electric wiring should be installed in accordance to local codes by a licensed electrician.

Install the backpressure/injection (Figure 7) on the discharge side of the metering pump into a tee which is installed into the water line going to the pressure tank.

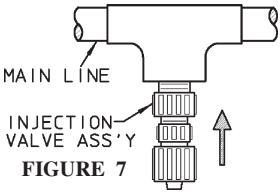

FIGURE 7

Pumps carrying the "ETL Sanitation" (tested to NSF Standard-50) marks are listed for swimming pools, spas and hot tubs, and when proper materials are selected, are capable of handling but not limited to the following chemical solutions:

12% ALUMINUM SULPHATE,	5% SODIUM CARBONATE,
2% CALCIUM HYPOCHLORITE,	10% SODIUM HYDROXIDE,
12.5% SODIUM HYPOCHLORITE,	10% HYDROCHLORIC ACID

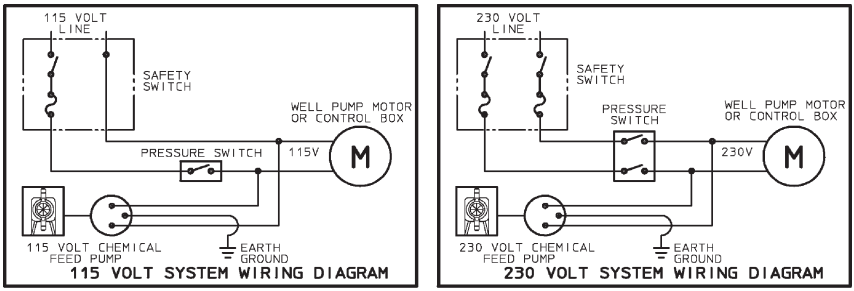

FIGURE 8

5.0 START UP AND OPERATION

5.1 CONTROL PANEL

A 4-key touch pad and 16 character display are used to control the operation of the pump.

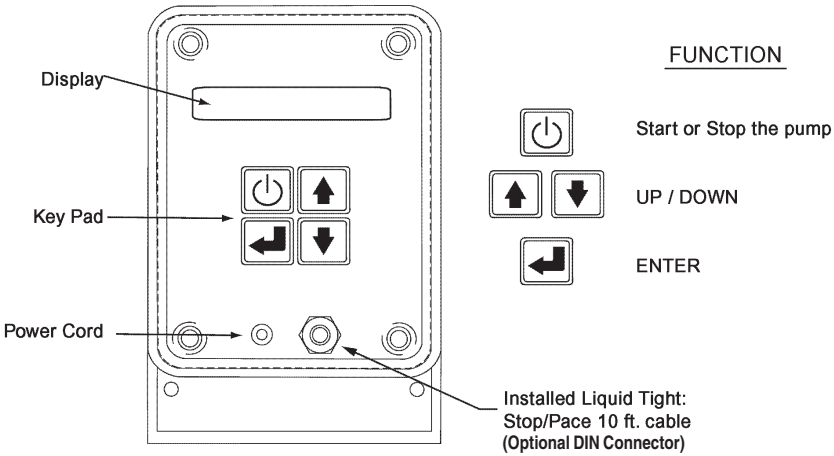

FIGURE 9

5.2 POWER

All metering pumps are available in 115 and 230 volts at 50/60 Hertz, single phase. Prior to start-up always check to insure that the pump voltage/frequency/phase matches that of the power supply.

CAUTION If pump is fitted with a PVC pump head (7th position of model number is “V” or "W". Note: PVC is gray, not black), uniformly hand tighten the four head screws before use, 18-22 in. lbs. (3.2 -3.9 kg/cm). Periodically tighten after installation.

5.2.1 Power-Up

The normal display sequence at power up is as follows:

```
****************  →  C: FXD — V1.00.0
```

The unit will then resume its last mode of operation (**Stand By, Fixed, Pace** or **Prime**).

While the pump is in the stand by mode, it will respond to key presses but will not discharge fluid. While in this mode the display will show the word STANDBY.

```
STANDBY
```

Press START/STOP to enter/exit the STAND BY mode.

5.3 PRIMING

Air must be purged from the pump head before the pump will operate against pressure. Priming removes the air. It should be performed when the pump is first installed and whenever the fluid supply is changed.

CAUTION **When working on or around a chemical metering pump installation, protective clothing, gloves and safety glasses should be worn at all times.**

CAUTION **All pumps are tested with water. If the chemical to be pumped reacts when mixed with water (e.g. sulfuric acid, polymer) the pump head should be removed and dried thoroughly along with the diaphragm and valve seats.**

CAUTION **The prime mode overrides the stop mode. Do not use prime if it presents a hazardous condition to the user.**

Use the following procedure to prime your pump:

- If the discharge line is connected directly to a pressurized system it should be temporarily bypassed during priming of the pump. The bleed valve supplied with the pump will simplify this operation by allowing easy bypass of the discharge fluid (refer to Figure 10 at the top of the next page). The bleed line should be routed back to the supply tank.

- Apply power. Press START/STOP until the display reads:

```
STANDBY
```

- Press and hold START/STOP for 5 seconds.

- Release START/STOP. The pump will stroke at its maximum rate for 5 minutes. The display will read:

  ✳ PRIME

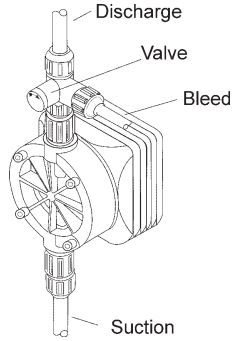

FIGURE 10

- While the pump is running, open the bleed valve adjustment knob by turning counter-clockwise.

- Run with the bleed valve open until a solid stream of fluid comes out of the bleed tubing with no air bubbles. Chemical should reach the pump head after a few minutes of operation. If not, refer to the ***TROUBLESHOOTING - "Pump will not prime"*** section in the back of this manual.

- Close the bleed valve by turning the adjustment knob clockwise. Confirm proper pump discharge.

- Press START/STOP. The pump is now ready for operation.

5.4 CAPACITY CONTROL

Capacity can be controlled by setting a fixed stroking rate or by allowing an external device (e.g., contacting head water meter) to pace the pump.

5.4.1 Fixed Operation

In the fixed mode, the pump is discharging fluid at a fixed rate. The stroke frequency can be controlled from 1% to 100% (1.2 to 125 strokes per minute), and is set by pressing the UP or DOWN arrow keys.

While in the fixed mode, the display will show the word FIXED followed by the current rate setting in percent.

✳ FIXED: 100%

The asterisk located at the extreme left side of the screen is displayed each time the pump strokes.

Stroke Frequency Calculation

Use the following example to determine the stroke frequency for a specified pump output.

Output Capacity	=	22 gallons per day (GPD)*
Desired Flow	=	15 GPD
Required Stroke Frequency	=	$\frac{15}{22} \times 100 = 68\%$ (approximate)

* Check this value by measurement. Output capacity is higher when feeding against less than rated pressure.

5.4.2 Pace Operation

The stroking action of the pump can be directly controlled through the pace input. The pump monitors the input pulses and accumulates them until the preset parameters are met, then the pump runs for a preset time.

5.4.2.1 Pace Wiring

To use the pace feature, the supplied liquid tight (included) and cable (10 ft. included) must be connected as shown below for the selected mode of operation. A 5 conductor 22AWG stranded cable (e.g., Consolidated E226774). Refer to Figure 11 below.

CAUTION **Disconnect power before wiring to the control panel assembly.**

FIGURE 11

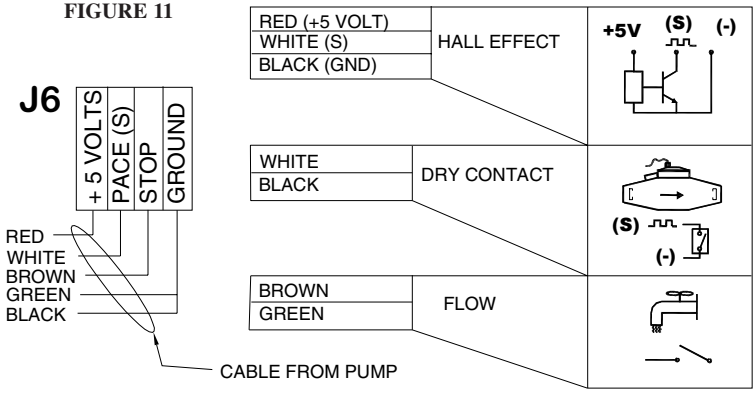

5.4.2.2 Pace Configuration

To use the pace input, the pump configuration must be changed from the default setting (FIXED).

Use the following procedure to change the pump configuration:

- Remove power from the pump.
- Press and hold START/STOP.

- While holding START/STOP, apply power to the pump.
- After the boot-up sequence, the pump configuration is loaded in from memory. If the configuration is valid, the following screen will appear:

CONFIGURATION:

The above screen will follow with the configuration of the pump. If the pump is set as FIXED operation, the screen will display:

FIXED RATE

- Press UP or DOWN arrow to select DRY CONTACT for dry contact operation, HALL EFFECT for Hall effect operation, or return to FIXED MODE.
- Press the ENTER KEY after you have made your selection.

<u>To configure Dry Contact:</u>

DRY CONTACT

- The next screen is for choosing the unit of measurement. Select GALLONS or LITERS using the UP or DOWN arrows to change the units. Press the ENTER key to save.

UNITS: GALLONS

UNITS: LITERS

- The next screen is for setting the amount of unit flow, in GALLONS/PULSE (or LITERS/PULSE). This value has a possible range of 1 through 9999. To set it, press the START/STOP key once. This will activate a cursor on the first digit of the value. Use the UP or DOWN arrows to change this digits' value. To move to the next digit, press the STOP/START key. When the proper value has been set, press the ENTER key to save the value.

GAL/PULSE: 0000

LTR/PULSE: 0000

- Next, set the amount of GALLONS (or LITERS) to flow by the water meter/Hall effect device. This value is set in the same manner as the K-factor. Use the START/STOP key to enable the cursor on the first digit. Use the UP or DOWN arrows to change the value highlighted by the cursor. Use the START/STOP key to move to the next digit. Press the ENTER key to save the desired value.

GALLONS: 000

LITERS: 000

- Finally, set the RUN TIME of the pump. The run-time value can be set between 00:00 and 59:59, and is stored in MM:SS format. Use the START/STOP key to place the cursor on the first place of the time. Use the UP or DOWN arrows to change the value highlighted by the cursor. Use the START/STOP key to change to the next digit. Use the ENTER key to save the desired run-time.

RUN-TIME: 00:00

<u>To configure Hall Effect:</u>

HALL EFFECT

- The next screen is for choosing the unit of measurement. Select GALLONS or LITERS using the UP or DOWN arrows to change the value. Press the ENTER key to save.

UNITS: GALLONS

UNITS: LITERS

- The next screen is for setting the value of the K-FACTOR. This value has a possible range of 0.001 through 9999.999. To set it, press the START/STOP key once. This will activate a cursor on the first digit of the K-factor. Use the UP or DOWN arrows to change this digits' value. To move to the next digit, press the START/STOP key. When the proper K-factor value has been set, press the ENTER key to save the value.

K-FACT.: 0000.000

- Next, set the amount of GALLONS (or LITERS) to flow by the water meter/Hall efect device. This value is set in the same manner as the K-factor. Use the START/STOP key to enable the cursor of the first

digit. Use the UP or DOWN arrows to change the value highlighted by the cursor. Use the START/STOP key to move to the next digit. Press the ENTER key to save the desired value.

GALLONS: 000

LITERS: 000

- Finally, set the RUN TIME of the pump. The run-time value can be set between 00:00 and 59:59, and is stored in MM:SS format. Use the START/STOP key to place the cursor on the first place of the time. Use the UP or DOWN arrows to change the value highlighted by the cursor. Use the START/STOP key to change to the next digit. Use the ENTER key to save the desired run-time.

RUN-TIME: 00:00

For either Pace configuration the system resets and initializes with your Dry Contact (or Hall Effect) configuration. For Dry Contact settings, the display will quickly show:

C:PCE-D V:1.00.XX

For Hall Effect settings, the display will quickly show:

C:PCE-H V:1.00.XX

The string"V:1.00.XX" is the current version of the software installed with the pump. After displaying the settings, the pump will finish initializing. When done, if the pump is not set to be in STANDBY mode, the following screen will appear:

PACE WAIT

5.4.2.3 Pace Operation

When the pump has received enough pulses on the pace input, the pump will turn on for the time specified by the user in configuration. The elapsed run time is displayed in the format below:

* PACE RUN 00:00

When the pump has completed its run-time, it will return to displaying the PACE WAIT screen.

5.4.2.4 Flow Measurement

Pumps configured for PACE input also display the approximate amount of gallons or liters that have passed by the sensor. This value can be displayed during normal operation from the PACE WAIT or PACE RUN screens. Press the UP key to display the FLOW value.

```
FLOW:  93,638,024
```

The FLOW value counts up the amount of GALLONS or LITERS up to 99,999,999 before rolling back to zero. The flow can also be reset back to zero by the operator by holding down the ENTER key for few seconds while on the FLOW screen. To return to the PACE WAIT or PACE RUN screen, press the UP key again.

5.4.3 Stop Operation

The stop input allows an external device such as a flow switch to stop the pump from stroking. This feature requires wiring. Refer to the Pace Wiring section (Figure 11) for further details.

When the switch opens, the pump will stop stroking and the following screen is displayed:

```
STOP
```

Start/Stop Wiring

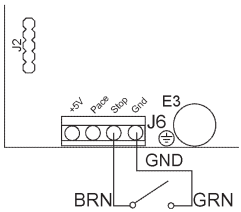

FIGURE 12

When the switch closes, the pump returns to its previous operating mode (e.g., Fixed or Pace).

The pump is normally shipped with wires attached to the STOP (BRN) and GND (GRN) positions of connector J6. This wire must be shorted for normal operation without an external switch (e.g., Flow Switch).

6.0 MAINTENANCE

CAUTION **Before performing any maintenance or repairs on chemical metering pumps, be sure to disconnect all electrical connections, insure that all pressure valves are shut off and pressure in the pump and lines has been bled off.**

CAUTION **Always wear protective clothing, gloves and safety glasses when performing any maintenance or repairs on chemical metering pumps.**

6.1 ROUTINE MAINTENANCE

- Routinely check the physical operating condition of the pump. Look for the presence of any abnormal noise, excessive vibration, low flow and pressure output or high temperatures [when running constantly at maximum stroke rate, the pump housing temperature can be up to 160°F (70°C)].
- For optimum performance, cartridge valves should be changed every 6-12 months. Depending on the application, more frequent changes may be required. Actual operating experience is the best guide in this situation.
- Repeated short-term deterioration of valve seats and balls usually indicates a need to review the suitability of wetted materials selected for the application. Contact the supplier for guidance.
- Check for leaks around fittings or as a result of deteriorating tubing (e.g. when standard white translucent discharge tubing is exposed to direct sunlight). Take appropriate action to correct the leak by tightening fittings or replacing components.
- Keep the pump free of dirt and debris as this provides insulation and can lead to excessive pump temperatures.
- If the pump has been out of service for a month or longer, clear the pump head and valve assemblies by pumping fresh water for approximately 30 minutes. If the pump does not operate normally after this “purging run”, replace the cartridge valve assemblies.

6.2 DISASSEMBLY AND ASSEMBLY DIAPHRAGM REMOVAL

Flush pump head and valve assemblies out by running pump with water or other suitable neutralizing solution. Wash outside of pump if chemical has dripped on pump.

Depressurize the system and disconnect tubing or piping from the pump. Remove the four pump head screws and then remove the pump head assembly.

Remove the diaphragm by grasping it at the outer edge and turning it counter clockwise until it unscrews from the electronic power module (EPM). Don't lose the deflector plate or diaphragm shims which are behind the diaphragm, they are needed for re-assembly. Note shim quantity may vary from 0 to 2.

Inspect diaphragm, if it is intended to be used again look for indications of the Teflon face being overstretched, (localized white areas) or the elastomer on the back of the diaphragm being worn. Excessive amounts of either condition require diaphragm replacement.

6.3 DIAPHRAGM REPLACEMENT

- When replacing the diaphragm, it is always a good idea to replace the valve cartridges and other worn parts. A kit is available from your supplier with all parts necessary to completely rebuild your pump's wet end. All your supplier needs to know is the "KOPkit Part No." on your pump's data label to supply this kit.

- If you kept the shims from the original diaphragm or know the original quantity you can avoid the next step for shimming the diaphragm.

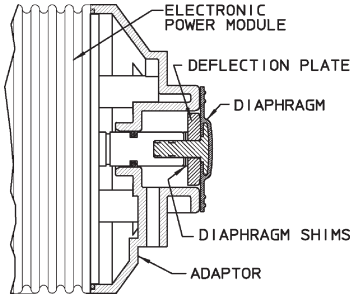

FIGURE 13

6.3 DIAPHRAGM REPLACEMENT cont'd.

- Apply grease to areas of the diaphragm that contact the deflection plate.

- Slide the diaphragm deflection plate onto the back of the diaphragm stud, radius side towards the diaphragm. Next slide two shims onto the diaphragm threaded stud and screw the diaphragm into the EPM unit. Refer to Figure 13. Turn diaphragm clockwise until deflection plate and shims are tight against solenoid shaft and the diaphragm stops turning. If there is a gap between the adaptor and diaphragm, repeat the procedure removing one shim each time until the diaphragm just touches the adaptor or is slightly recessed.

- Place the pump head onto the adaptor with valve flow arrows pointing up and install and tighten pump head screws. Tighten screws until pump head pulls up against the adaptor.

6.4 VALVE REPLACEMENT

- Flush pump to clean any chemical from pump head.

- Unplug pump, release system pressure, and disconnect tubing or piping.

- Unscrew valve cartridges and discard. Also remove o-rings down inside the pump head.

- Install new valve cartridges with stamped letters reading from top to bottom, and the arrow pointing in the direction of flow. Hand tighten only, do not use wrenches or pliers. This is especially important when the pump head is made of SAN material.

- Reconnect tubing or piping and reinstall the pump.

- Check for leaks around newly installed fittings.

7.0 TROUBLESHOOTING

PROBLEM	PROBABLE CAUSE	REMEDY
FAILURE TO PUMP	1. Leak in suction side of pump.	1. Examine suction tubing. If worn at the end , cut approximately one inch (2.5 cm) off and reconnect.
	2. Valve seats not sealing.	2. Clean valve seats if dirty or replace with alternate material if deterioration is noted.
	3. Low setting on pump.	3. When pumping against pressure, the pump should be set above 20% capacity for a reliable feed rate.
	4. Low suction level.	4. Solution must be above foot valve strainer.
	5. Diaphragm ruptured.	5. Replace diaphragm as shown in 6.0 "Maintenance Section". Check for pressure above rated maximum at the injection point. NOTE: Chemical incompatibility with diaphragm material can cause diaphragm rupture and leakage around the pump head.
	6. Pump head cracked or broken.	6. Replace pump head as shown in 6.0 "Maintenance Section". Make sure fittings are hand tight only. Using pliers and wrench can crack pump head. Also, chemical incompatibility can cause cracking and subsequent leakage.
	7. Pump head contains air or chlorine gas.	7. Bleed pump head, see 5.0 "Start-up and Operation".
	8. Breakdown or disconnection of wiring.	8. Connect wiring properly. Check fuse.
	9. Voltage drop.	9. Take measures after investigation of cause.
	10. Malfunction of electronic control board.	10. Contact supplier. The electronic control board is not user serviceable.

7.0 TROUBLESHOOTING cont'd.

PROBLEM	PROBABLE CAUSE	REMEDY
LOSS OF CHEMICAL RESIDUAL	1. Pump setting too low. 2. Scale at injection point. 3. Solution container allowed to run dry	1. Increase the pumps stroke rate. 2. Clean injection parts with 8% muriatic acid or undiluted vinegar. (Also, see Maintenance Section). 3. Refill the tank with solution and prime. (See Start-up and Operation Section).
TOO MUCH CHEMICAL	1. Pump setting too high. 2. Chemical in solution tank too rich. 3. Siphoning of chemical into well or main line.	1. Decrease the pumps stroke rate. 2. Dilute chemical solution. NOTE: For chemical that reacts with water, it may be necessary to purchase a more dilute grade of chemical direct from chemical supplier. 3. Test for suction or vacuum at the injection point. If suction exists, install an anti-siphon valve.
LEAKAGE AT TUBING CONNECTIONS	1. Worn tube ends. 2. Chemical attack.	1. Cut off end of tubing (about 1 in/2.5 cm) and then reconnect as before. 2. Consult your seller for alternate material.
LEAKAGE AT FITTING	1. Loose fittings. 2. Broken or twisted gasket. 3. Chemical attack.	1. Tighten hand tight. Replace gasket if hand tightening does not stop leakage. 2. Check gaskets and replace if broken or damaged. 3. Consult your pump supplier for alternate material.

7.0 TROUBLESHOOTING cont'd.

PROBLEM	PROBABLE CAUSE	REMEDY
PUMP LOSES PRIME	1. Dirty check valve.	1. Remove and replace or clean off any scale or sediment.
	2. Ball checks not seating or not sealing properly.	2. Check seat and ball checks for chips, clean gently. If deformity or deterioration is noted, replace part with proper material. Resulting crystals can hold check valves open, therefore, the valves must be disassembled and cleaned.
	3. Solution container allowed to run dry.	3. Refill the tank with solution and prime. See 5.0 (Start-Up and Operation Section).
	4. Chemical Outgassing.	4. Bleed gas, use flooded suction and maintain chemical at room temperature (approx. 20°F) to minimize outgassing.
PUMP WILL NOT PRIME	1. Too much pressure at discharge.	1. Turn off all pressure valves, relieve system pressure then loosen outlet tubing connection at discharge point. Remove discharge valve cartridge. Dampen ball check and valve seats with a few drops of solution. Set pump to max. stroke rate. When pump is primed, reconnect all tubing connectors.
	2. Check valves not sealing.	2. Disassemble, clean & check for deterioration, damage or swelling. Reassemble and wet the valve assembly, then prime. See 5.0 (Start-Up & Operting Section).
	3. Stroke rate not set at maximum.	3. Always prime pump with stroke rate set at maximum rated capacity.
	4. Suction lift height too much. Maximum 5 ft (1.5 m)	4. Decrease suction lift or pull vacuum on pump discharge until pump is primed.
	5. Pump equipped with spring loaded high viscosity valves.	5. Loosen discharge valve to aid in priming, take necessary safety precautions for spills, or apply vacuum to pump discharge.

8.0 POLICIES AND PROCEDURES

8.1 MANUFACTURERS PRODUCT WARRANTY

The manufacturer warrants its equipment of its manufacture to be free of defects in material or workmanship Liability under this policy extends for eighteen (18) months from the date of purchase or one (1) year from date of installation or whichever comes first. The manufacturer's liability is limited to repair or replacement of any device or part, which is returned, prepaid, to the factory and which is proven defective upon examination. This warranty does not include installation or repair cost and in no event shall the manufacturer's liability exceed its selling price of such part.

The manufacturer disclaims all liability for damage to its products through improper installation, maintenance, use or attempts to operate such products beyond their functional capacity, intentionally or otherwise, or any unauthorized repair. Replaceable elastomeric parts are expendable and are not covered by any warranty either expressed or implied. The manufacturer is not responsible for consequential or other damages, injuries or expense incurred through use of its products.

The above warranty is in lieu of any other warranty, either expressed or implied. The manufacturer makes no warranty of fitness or merchantability. No agent of ours is authorized to make any warranty other than the above.

For warranty and service matters within the European Union, contact the seller first or:

Pulsafeeder Europe
Marssteden 68
7547 AD Enschede
The Netherlands

8.2 EUROPEAN TECHNICAL FILE LOCATION

P.O. Box 91
Washington
NE371YH
United Kingdom

8.3 RETURNS

The Customer Service Department will issue a Return Authorization (RA) number for all returns. The following information will be required:

1. Billing and a ship-to address.
2. Model and serial number.
3. Contact name and phone number.
4. Reason for return.
5. Purchase order (where applicable).
6. RA number on outside of the carton.

All material must be returned freight prepaid. All merchandise must be properly packaged and free of any corrosive, toxic or otherwise hazardous chemical. All items returned must reference Return Authorization.

8.4 CREDITS

No equipment will be accepted beyond six months after date of shipment from the factory. Only unused and undamaged equipment will be accepted for return to stock. All credits are based on acceptance of materials as new and unused by our inspection personnel. A restocking fee will apply. All equipment returned for credit must have a RA number and be returned freight prepaid.

9.0 SPECIFICATIONS

Unit Power

- Operating Voltage: 115/230 V~ +/- 10% (factory configured), 2AMPS's max.
- Protection Fuse: 250V~, 2A fast acting (littelfuse P/N: 218 002)
- Cordage: 8' length 16AWG 3-wire Domestic 115 or 230V~ power cord set (factory configured)

Pace Input

- Dry Contact or Open Collector (Hall Effect)
- 5 conductor 22 AWG PVC control cable, Consolidated E226774 or equivalent

Stop Input

- Dry Contact or Open Collector (Hall Effect)
- 5 conductor 22 AWG PVC control cable, Consolidated E226774 or equivalent

User Interface

- Display: 16 Character LCD
- Keypad: Membrane style, 4 Keys: Enter, Up, Down, Start/Stop

Enclosure

- IP Rating: IP54 (Protected against dust and splashing water)
- NEMA Rating: Type 3R (vented enclosure protected against dust, rain, sleet and ext. ice)

Environment

Maximum Ambient Temperature: 104°F (40°C)

L9409200-000
C05